Hillmar
Hillmar Industries Ltd.

DOC NO.: 200-280-65535

2 THRUSTER RAIL BRAKES

STATIC RAIL BRAKE

INTERNATIONAL PATENTS APPLY

1.0 Thruster Rail Brake Models

PATENT PENDING

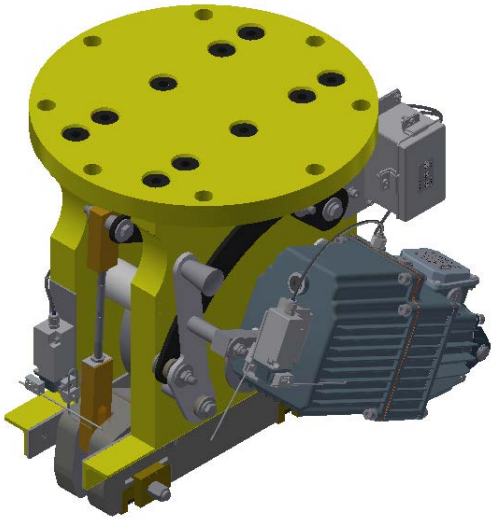

TRBS-DTSR-100-050

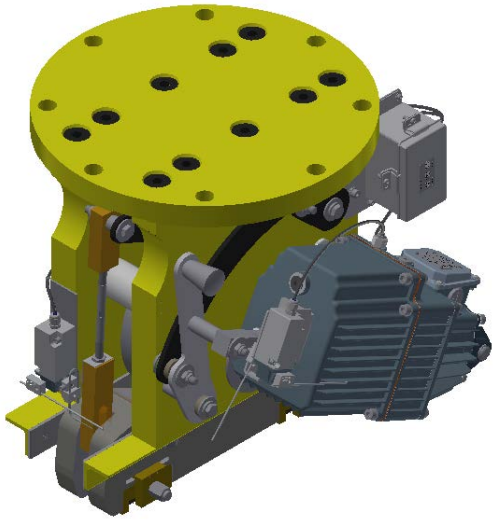

TRBS-STSR-200-050

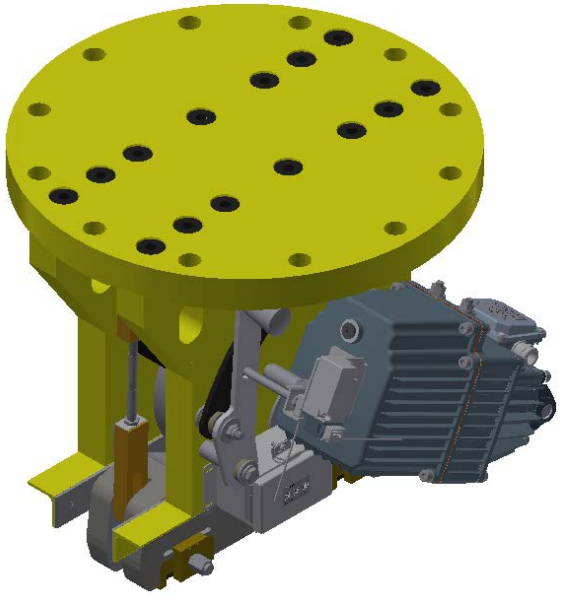

TRBS-STSR-300-050

2.0 Principle of Operation

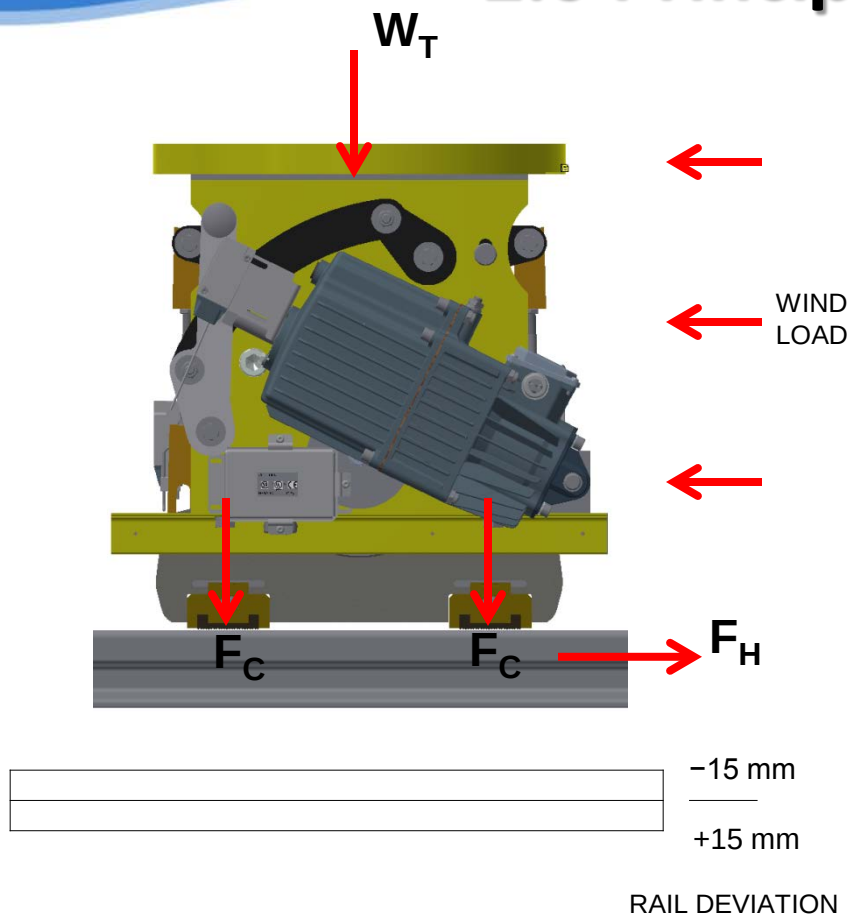

Wind load will want to push crane forward causing the crane weight to push down on the rail brake W_T.

Rail brake is set.
Wedge shoe and roller engage.

Push down force clamping force created F_c.

Brakes holds the crane F_H.

$F_H = F_c \times \mu$

Working Range

This device is designed to accommodate large variation in rail deviation. Thus, it is ideal for installation at center of crane.

2.1 Force Calculation

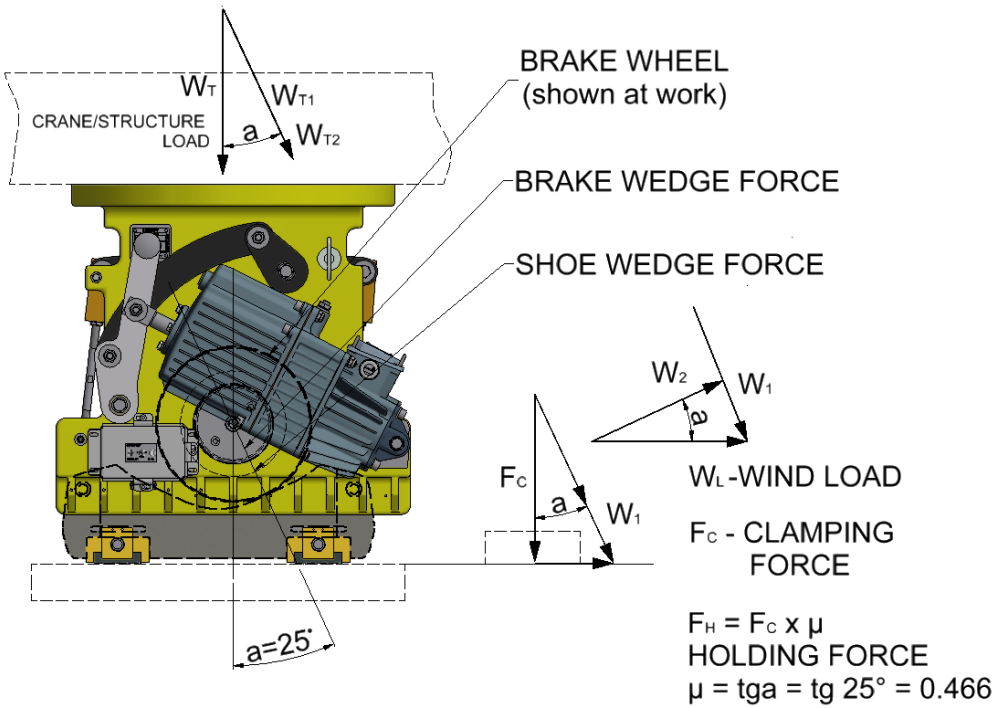

International patents apply.
This device is a self-energizing device, it therefore requires the weight of the crane pushing down on the mechanism.

W_L - Wind load on crane structure
W_T - Crane load

$W_{T1} = W_T \times \cos \alpha$
$W_1 = W_L \times \cos \alpha$

$W_{T2} = W_T \times \sin \alpha$
$W_2 = W_L \times \cos \alpha$

$W_{T2} = W_2$ - Requires for brake activation

$F_C = (W_{T1} + W_1) \times \cos \alpha$
$F_H = F_C \times \tan \alpha = (W_{T1} + W_1) \times \sin \alpha$

3.0 Design Highlights

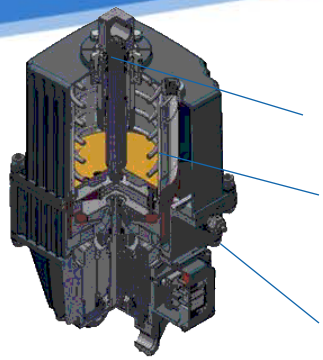

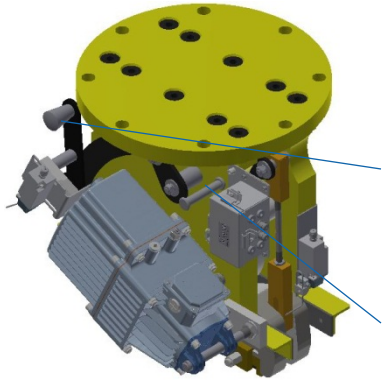

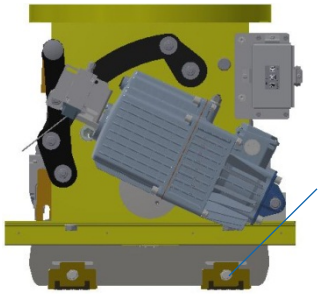

- **Patented shoe** (refer to page 3.1 on page 6)
- Each thruster is provided with wedge setting spring
- Adjustable thruster lowering valve which ensures rail brake sets after crane stops.
- Stainless steel piston rod.
- All thrusters designed to DIN15430 standard.
- Manual release lever.
- Mechanism caging pin.
- Specially designed friction shoes.
- International patent on shoe wedge face design.
- Friction shoe wedge face machined to ensure constant push down force at all positions of brake on the wedge (patented).

3.1 Patented Shoe

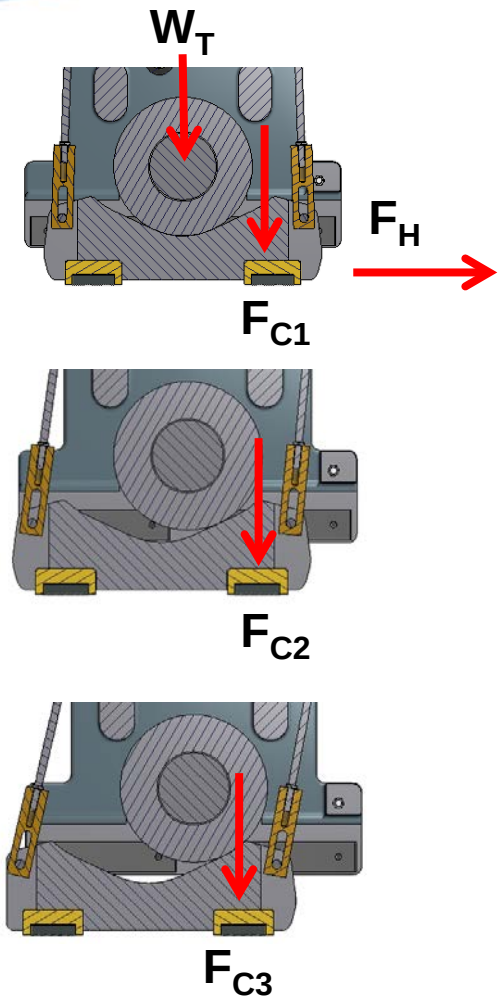

- The shoe profile has been mathematically profiled to ensure that no mater what position the wedge and the load roller are in the push down force W_T which translates in to the clamping (braking) force is always the same.
- This $F_{C1} = F_{C2} = F_{C3}$
- From page 3,

  $F_H = F_c \times \mu$

4.0 Standard Features

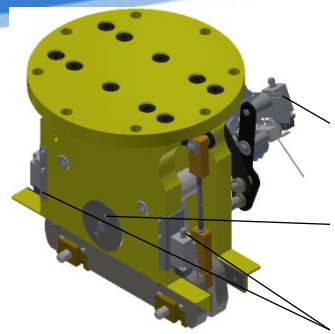

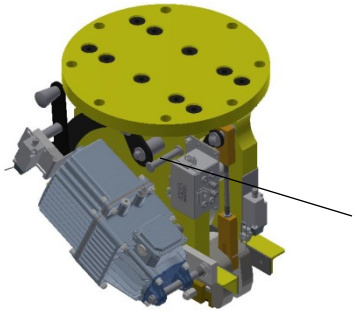

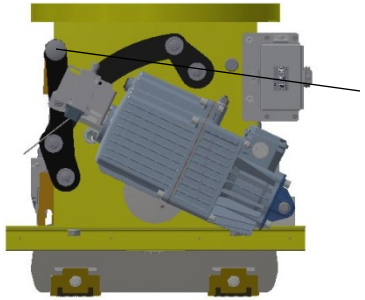

- Brake Release Switch.
- Directional Switch System Standard. Thus crane receives a signal indicating direction of rail brake engagement.
- The remote power unit & consequently expensive hydraulic piping & commissioning are eliminated.
- Stainless steel pins throughout brakes.
- Three Year Paint System Standard.
- Complete & comprehensive digital document system.
- All thrusters designed to DIN 15430 Standard, thus completely interchangeable with other DIN standard thrusters.
- Mechanism caging pin.
- Manual release mechanism.
- Fully tested with Hillmar Industry leading test equipment.
- Full load capacity test certificates.

5.0 Design Options

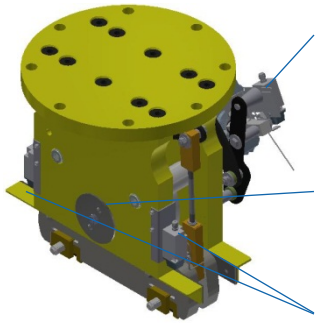

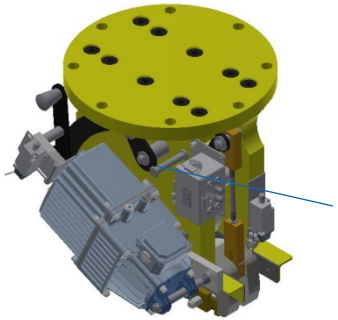

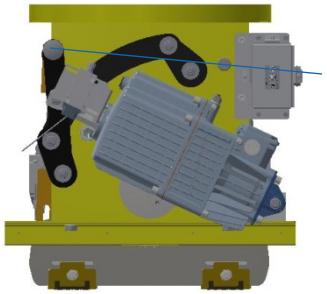

- Custom mounting flange
- Custom paint color
- Complete 5 year structural corrosion protection.
- Hose & fitting packages

6.0 Standards

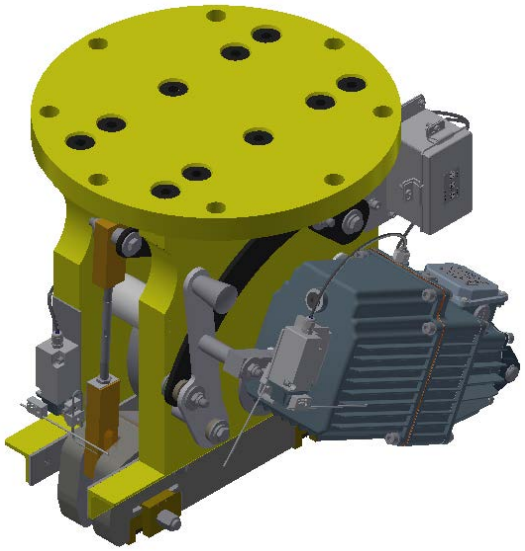

All Hillmar products are designed & manufactured in accordance with the following standards.

6.1 Design standards.
6.2 Performance standards.
6.3 Document standards.
6.4 Production & Quality standards.
6.5 Packaging standards.

All Hillmar products are delivered with Hillmar commitment to customer satisfaction.

All Hillmar products manufactured in accordance with DIN 10204-2.1